Innovations in rotogravure printing

Bülent Dil
Technical Sales
Windmöller & Hölscher
Jakarta, 30th of November 2011

Innovations in rotogravure printing

- State-of-the-art inking system
- Easy-Sync - automatic pre-register system
- Heliocontrol - integrated register control system
- High-performance drying system

State-of-the-art inking system

Innovations in rotogravure printing
Inking system

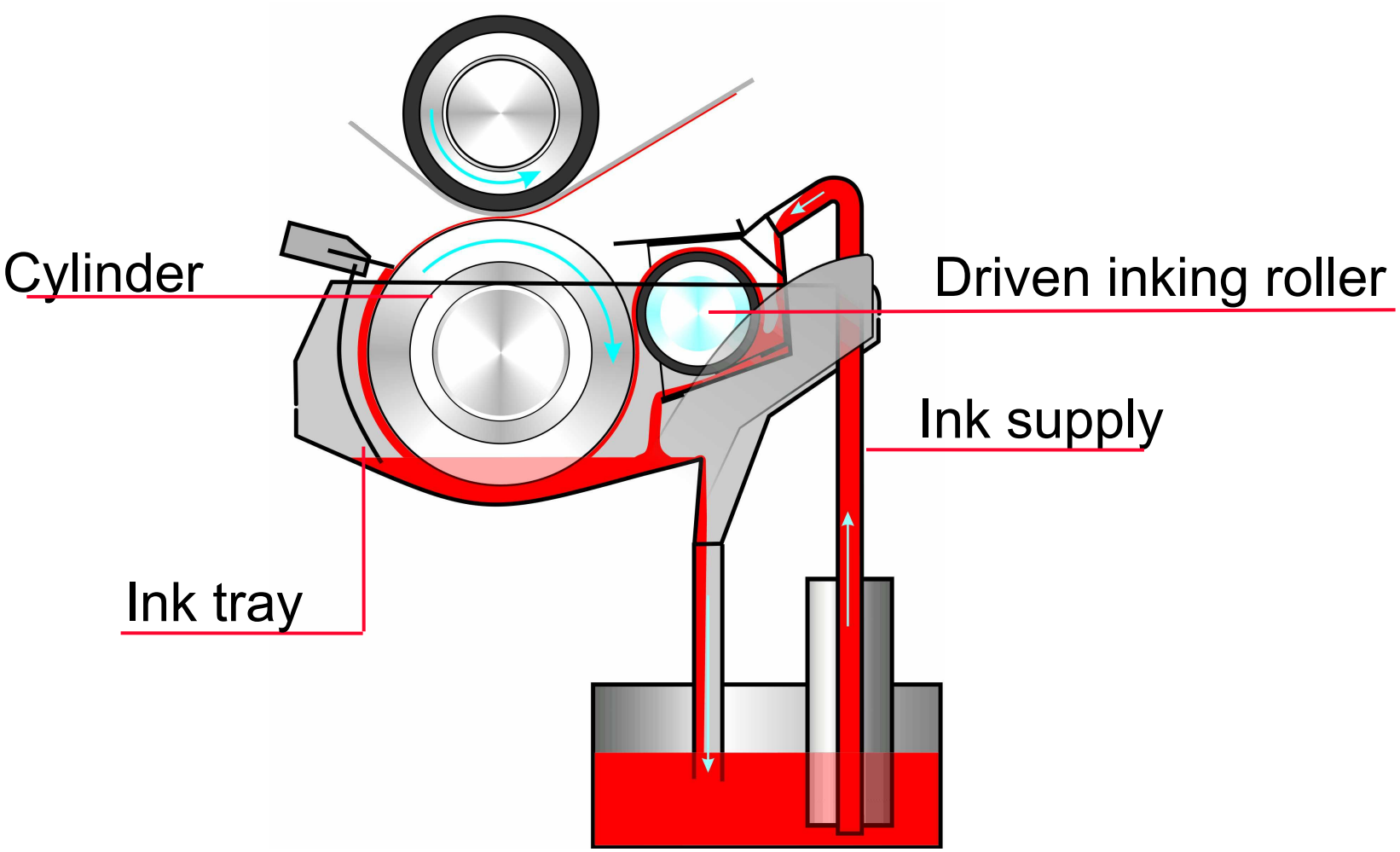

Innovations in rotogravure printing

Easy-Sync

automatic pre-register

Automatic Pre-Register Setting

Production 1st Job

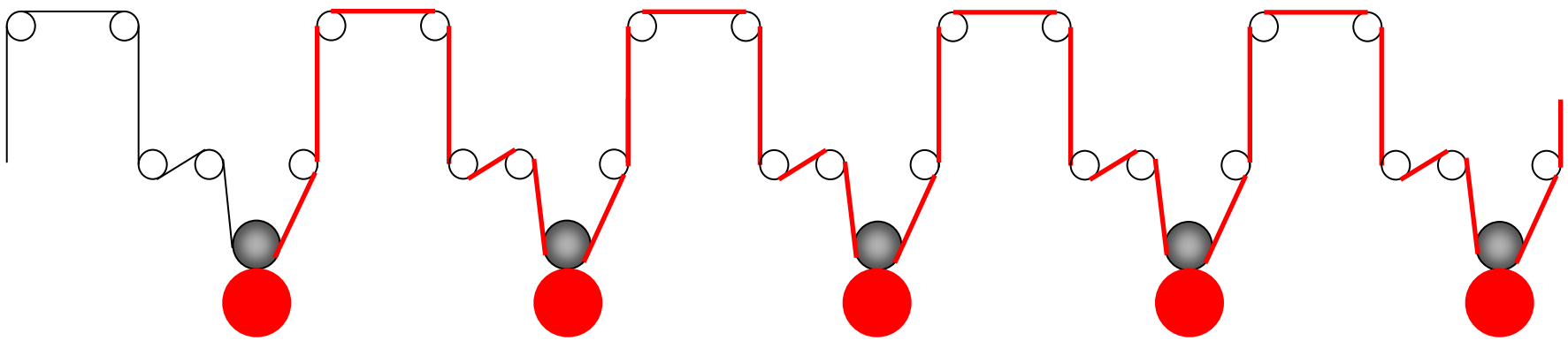

Innovations in rotogravure printing

Heliocontrol – integrated register control system

HELIOCONTROL
Drive & Register Management

HELIOSTAR® S

- Storage of all recipe data and settings on the machine PLC

→ Easy operation

- Ability of web-cylinder mode in all units - longitudinal and lateral register control of invisible marks

→ Laquer, coldseal or inks with difficult optical properties can be easily run in register on all print stations

- Machine “knows“ the substrate details (thickness, width, material type) and all its properties.

→ Automatic controller adjustment

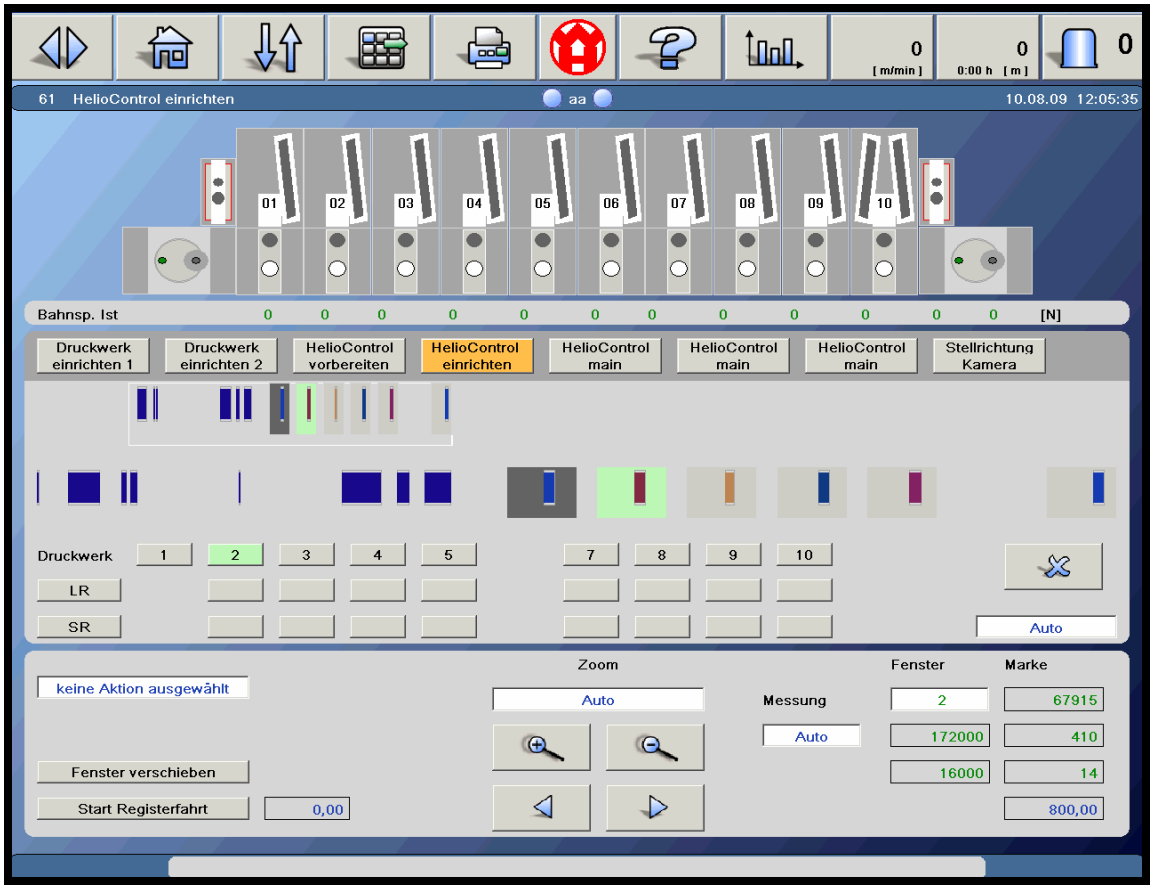

Innovations in rotogravure printing

High-performance drying system

Innovations in rotogravure printing

- Consistent printing quality with driven inking roller
- Minimized start-up waste – Easy-Sync pre-register system
- Perfect register with integrated register controller Heliocontrol
- Efficient and flexible air blade drying system

Innovations in rotogravure printing

Thank you for your attention!