Flexibility

R&D

Safety

Set-up time

Quality

Tension Control

Operator Friendly

Reliability

Coating and Laminating Machinery No-Limits

nordmeccanica
group

www.nordmeccanica.com

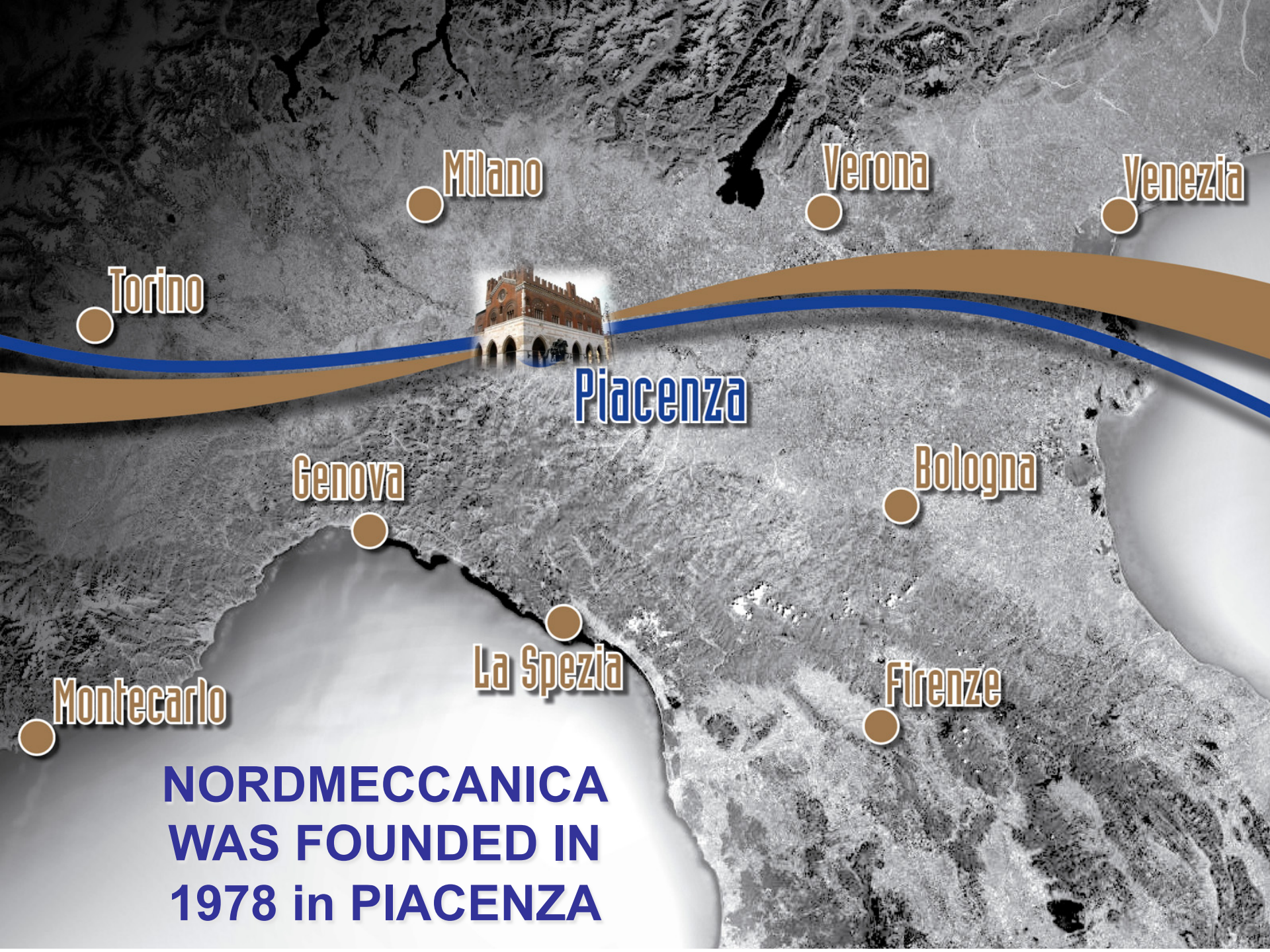

NORDMECCANICA WAS FOUNDED IN 1978 in PIACENZA

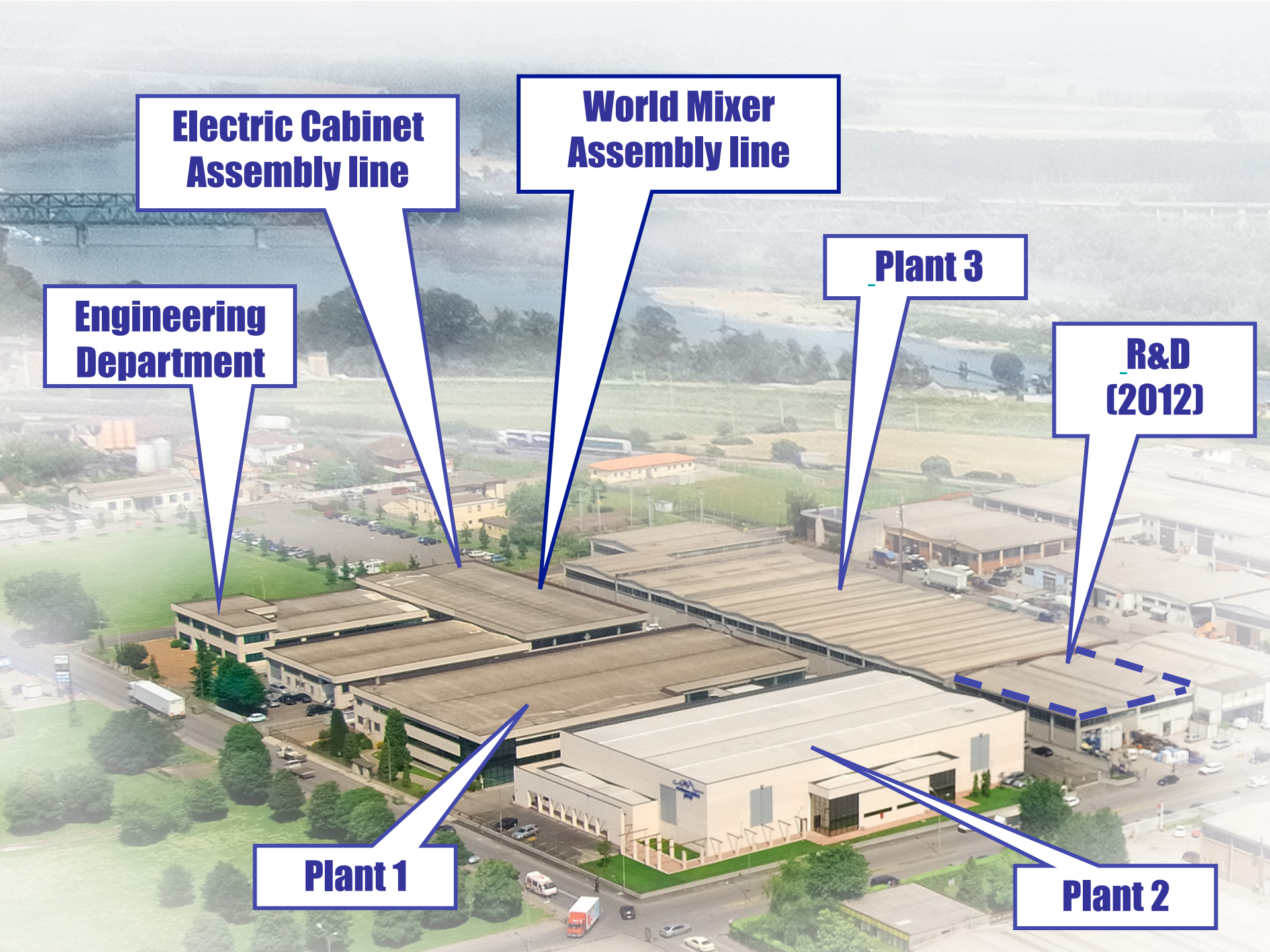
Electric Cabinet Assembly line
World Mixer Assembly line
Plant 3
Engineering Department
R&D (2012)
Plant 1
Plant 2

Plant 4
nordmeccanica
group

Today

- 200 employees.
- 2 Locations, 5 Plants.
- 18.550 m^2 (200,000 sqf).
- Plant expansion in 2006-7-8-10-11-12
- 55 M Euro Volume of yearly sales.
- 65% Global Market Share.
- Nordmeccanica NA.
- Nordmeccanica LA.
- Nordmeccanica China.

nordmeccanica group

1780 machines Installed globally

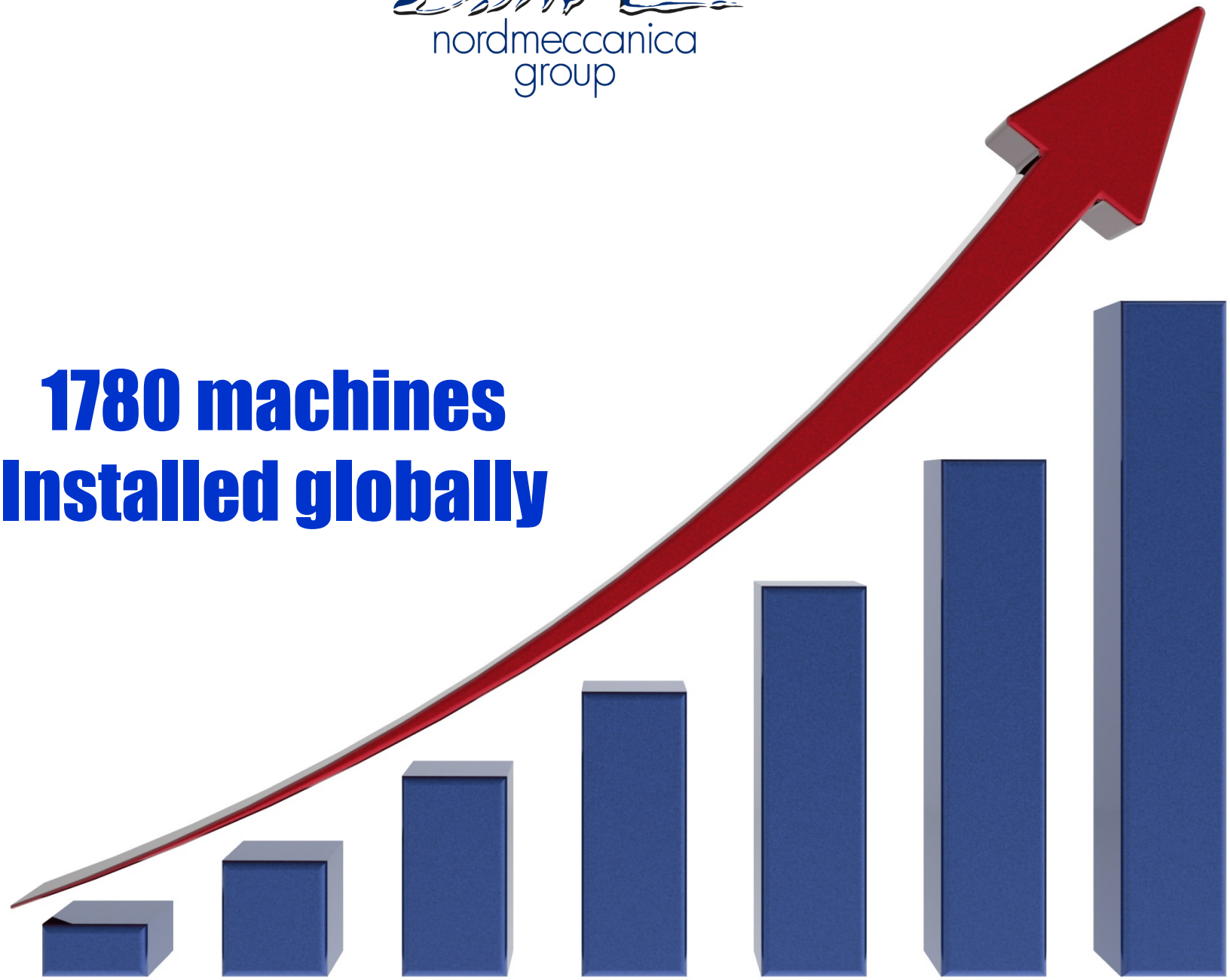

Sales - M Euro
60
55
50
45
40
35
30
25
2001 2004 2005 2006 2007 2008 2009 2010

worldwide leader in laminating machines

nordmeccanica group

forza vendita Nordmeccanica Group

Commercial network

Covering Asia-Pacific

NORDMECCANICA MACHINERY CO., LTD.

NAMKYUNG CO. LTD.

C.S. PLASTMACH CO. LTD

RE-MIGHT ENTERPRISE CO. LTD.

CORVET TECHNOLOGIES SDN BHD

SONG SONG CO. LTD.

TPT INTERNATIONAL INC

PT. BATUMASINDAH SUKSESMAKMUR RUKAN ARIES NIAGA

ALLIED EQUIPMENT & SUPPLIES LTD

nordmeccanica group

1978-1980

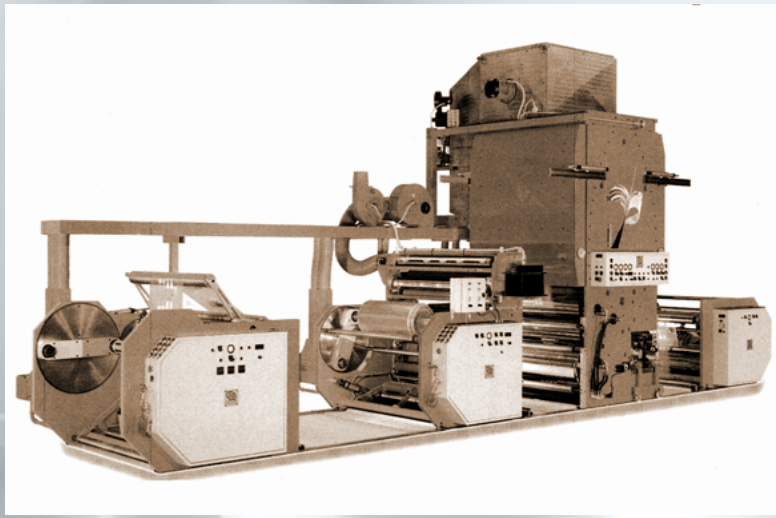

1st Modular design machine

1st Release of coating units on trolleys

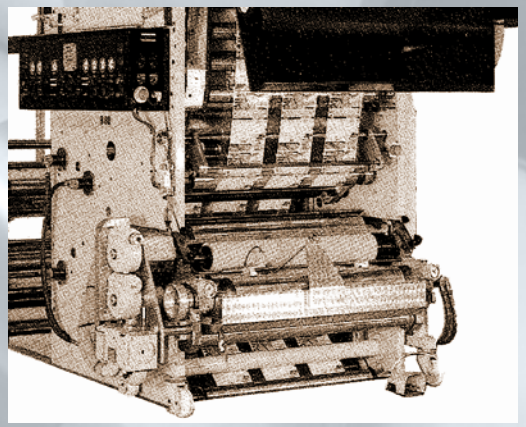

1st Release of Solvent Free Coating Unit.

nordmeccanica group

1981-1990

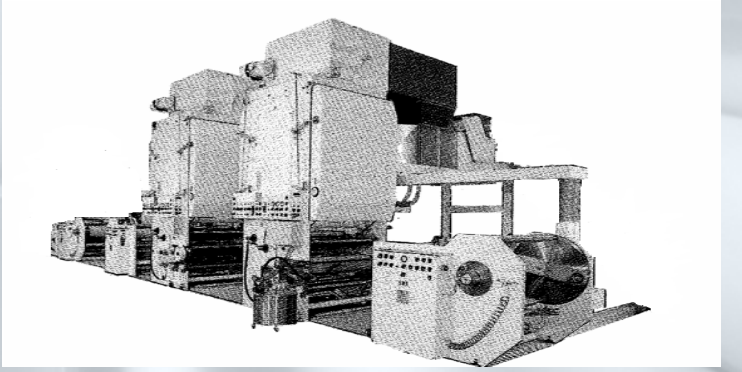

1st Triplex Combi

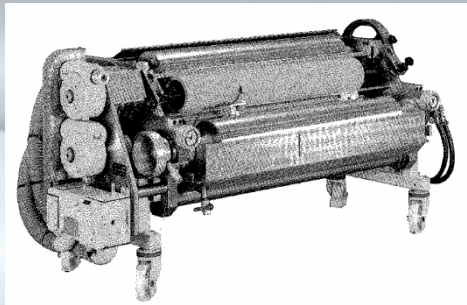

1st 5 rollers SL Coating Unit (NM Patent)

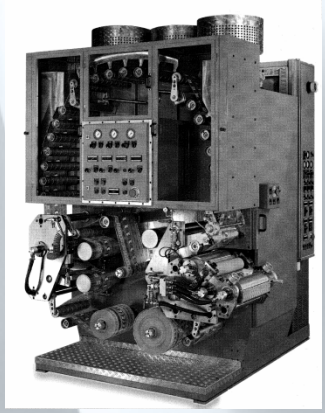

1st Labo machine

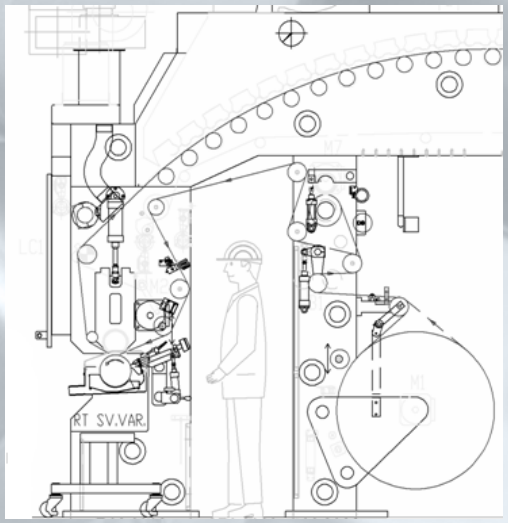

1st Cold Seal unit, in register, out of line.

nordmeccanica group

1991-2000

Simplex Combi

"Simplex: the Concept"!

20th Anniversary

World Mixer.

nordmeccanica group

2001…

Super Combi 2000

Combi Horizontal

Quadruplex

nordmeccanica group

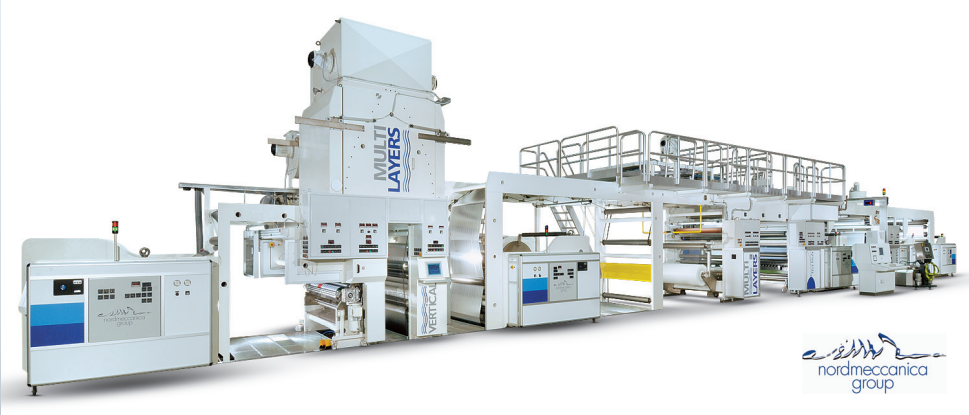

Multi Layer – 5-ply

Duplex Compact 600

Fusion

Super Combi 3000

nordmeccanica group

Triplex Combi Horizontal

Linear

...thank you!
nordmeccanica
group